Cambridge Assessment International Education

Cambridge International AS & A Level

CANDIDATE NAME

CENTRE NUMBER | | | | | |

CANDIDATE NUMBER | | | | |

1607777453

PHYSICS **9702/21**

Paper 2 AS Level Structured Questions **October/November 2023**

1 hour 15 minutes

You must answer on the question paper.

No additional materials are needed.

INSTRUCTIONS

- Answer **all** questions.
- Use a black or dark blue pen. You may use an HB pencil for any diagrams or graphs.
- Write your name, centre number and candidate number in the boxes at the top of the page.
- Write your answer to each question in the space provided.
- Do **not** use an erasable pen or correction fluid.
- Do **not** write on any bar codes.
- You may use a calculator.
- You should show all your working and use appropriate units.

INFORMATION

- The total mark for this paper is 60.
- The number of marks for each question or part question is shown in brackets [ ].

This document has **16** pages. Any blank pages are indicated.

© UCLES 2023

Data

acceleration of free fall	g	=	$9.81\ \text{m s}^{-2}$
speed of light in free space	c	=	$3.00 \times 10^{8}\ \text{m s}^{-1}$
elementary charge	e	=	$1.60 \times 10^{-19}\ \text{C}$
unified atomic mass unit	1 u	=	$1.66 \times 10^{-27}\ \text{kg}$
rest mass of proton	m_p	=	$1.67 \times 10^{-27}\ \text{kg}$
rest mass of electron	m_e	=	$9.11 \times 10^{-31}\ \text{kg}$
Avogadro constant	N_A	=	$6.02 \times 10^{23}\ \text{mol}^{-1}$
molar gas constant	R	=	$8.31\ \text{J K}^{-1}\ \text{mol}^{-1}$
Boltzmann constant	k	=	$1.38 \times 10^{-23}\ \text{J K}^{-1}$
gravitational constant	G	=	$6.67 \times 10^{-11}\ \text{N m}^2\ \text{kg}^{-2}$
permittivity of free space	ε_0	=	$8.85 \times 10^{-12}\ \text{F m}^{-1}$
	$\left(\frac{1}{4\pi\varepsilon_0}\right.$	=	$\left.8.99 \times 10^{9}\ \text{m F}^{-1}\right)$
Planck constant	h	=	$6.63 \times 10^{-34}\ \text{J s}$
Stefan–Boltzmann constant	σ	=	$5.67 \times 10^{-8}\ \text{W m}^{-2}\ \text{K}^{-4}$

Formulae

uniformly accelerated motion	s	=	$ut + \frac{1}{2}at^2$
	v^2	=	$u^2 + 2as$
hydrostatic pressure	Δp	=	$\rho g \Delta h$
upthrust	F	=	$\rho g V$
Doppler effect for sound waves	f_o	=	$\frac{f_\text{s} v}{v \pm v_\text{s}}$
electric current	I	=	$Anvq$
resistors in series	R	=	$R_1 + R_2 + \ldots$
resistors in parallel	$\frac{1}{R}$	=	$\frac{1}{R_1} + \frac{1}{R_2} + \ldots$

© UCLES 2023

1 **(a)** Compare scalar and vector quantities.

.....

.....

..... [2]

(b) The radius of a small sphere is determined from a measurement of the volume of the sphere. The sphere is submerged in water, displacing some of the water into a measuring cylinder as shown in Fig. 1.1.

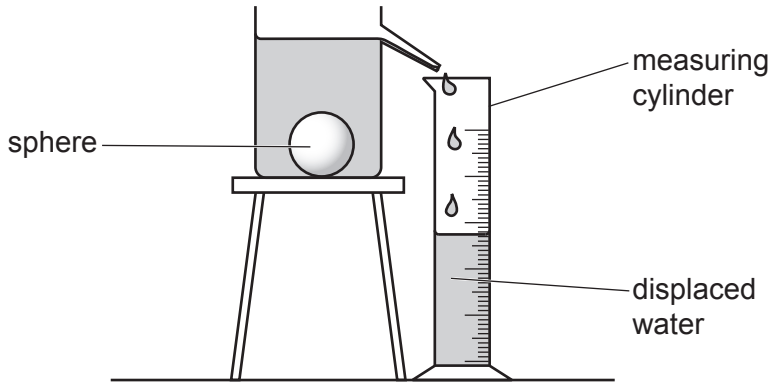

Fig. 1.1 (not to scale)

The measured volume of displaced water is $(28.0 \pm 0.5)\,cm^3$.

Calculate:

(i) the radius, in cm, of the sphere

radius = ... cm [1]

(ii) the percentage uncertainty in the radius of the sphere.

percentage uncertainty = ... % [2]

[Total: 5]

© UCLES 2023

2 A hot-air balloon floats just above the ground. The balloon is stationary and is held in place by a vertical rope, as shown in Fig. 2.1.

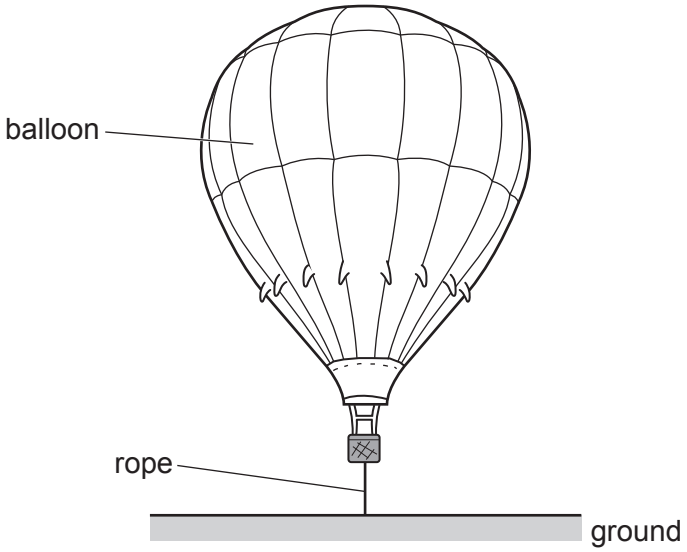

Fig. 2.1

The balloon has a weight W of 3.39×10^4 N. The tension T in the rope is 4.00×10^2 N.
Upthrust U acts on the balloon.
The density of the surrounding air is $1.23\,\text{kg}\,\text{m}^{-3}$.

(a) (i) On Fig. 2.1, draw labelled arrows to show the directions of the three forces acting on the balloon. [2]

(ii) Calculate the volume, to three significant figures, of the balloon.

volume = ... m^3 [3]

(iii) The balloon is released from the rope.

Calculate the initial acceleration of the balloon.

acceleration = ... $\text{m}\,\text{s}^{-2}$ [3]

© UCLES 2023

(b) The balloon is stationary at a height of 500 m above the ground. A tennis ball is released from rest and falls vertically from the balloon.

A passenger in the balloon uses the equation $v^2 = u^2 + 2as$ to calculate that the ball will be travelling at a speed of approximately $100\,m\,s^{-1}$ when it hits the ground.

Explain why the actual speed of the ball will be much lower than $100\,m\,s^{-1}$ when it hits the ground.

.....

.....

.....

..... [3]

(c) Before the balloon is released, the rope holding the balloon has a strain of 2.4×10^{-5}. The rope has an unstretched length of 2.5 m. The rope obeys Hooke's law.

(i) Show that the extension of the rope is $6.0 \times 10^{-5}\,m$.

[1]

(ii) Calculate the elastic potential energy E_P of the rope.

E_P = ... J [2]

(iii) The rope holding the balloon is replaced with a new one of the same original length and cross-sectional area. The tension is unchanged and the new rope also obeys Hooke's law.

The new rope is made from a material of a lower Young modulus.

State and explain the effect of the lower Young modulus on the elastic potential energy of the rope.

.....

.....

..... [2]

[Total: 16]

3 A trolley A moves along a horizontal surface at a constant velocity towards another trolley B which is moving at a lower constant speed in the same direction. Fig. 3.1 shows the trolleys at time $t = 0$.

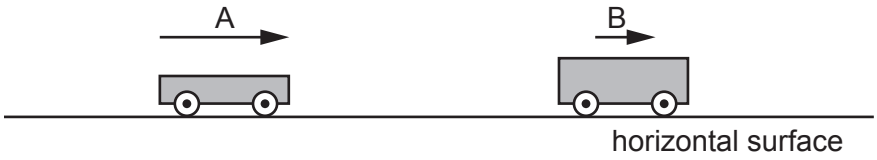

Fig. 3.1

Table 3.1 shows data for the trolleys.

Table 3.1

trolley	mass / kg	initial speed / m s^{-1}
A	0.25	0.48
B	0.75	0.12

The two trolleys collide elastically and then separate. Resistive forces are negligible.

Fig. 3.2 shows the variation with time t of the velocity v for trolley B.

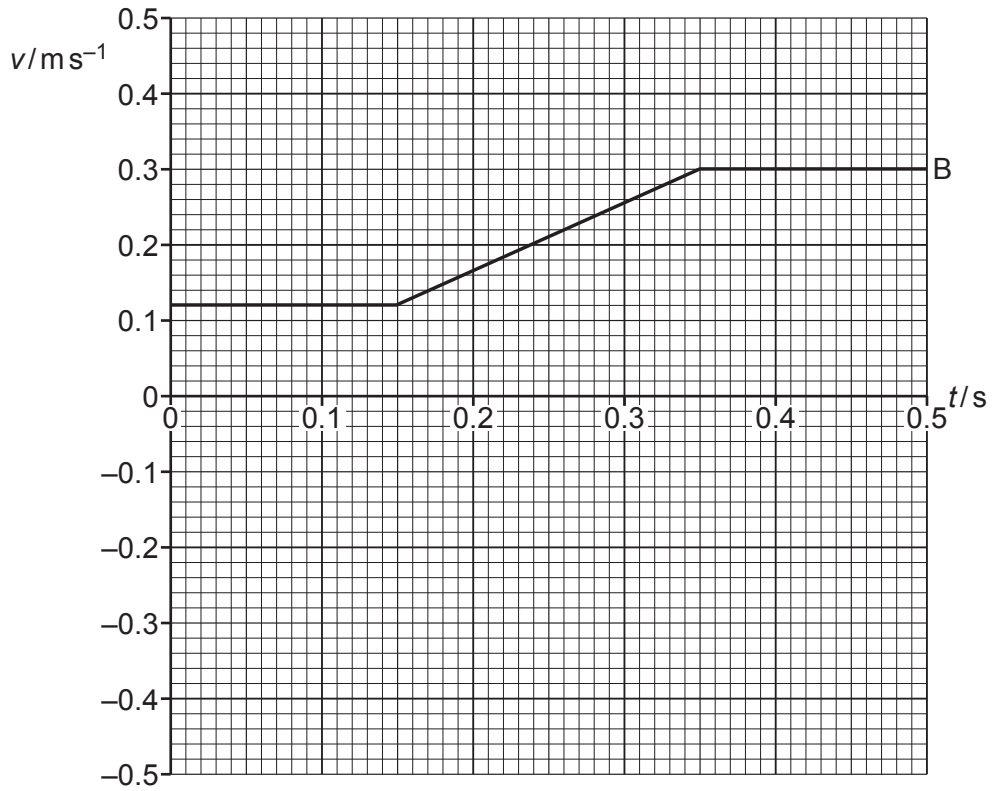

Fig. 3.2

(a) State what is represented by the area under a velocity–time graph.

..... [1]

(b) Use Table 3.1 and Fig. 3.2 to determine:

(i) the acceleration of trolley B during the collision

acceleration of B = ... $m\,s^{-2}$ [2]

(ii) the magnitude and direction of the final velocity of trolley A.

magnitude = ... $m\,s^{-1}$

direction .....
[3]

(c) On Fig. 3.2, sketch the variation of the velocity of trolley A with time t from $t = 0$ to $t = 0.50\,s$.
[3]

[Total: 9]

4 **(a)** State the principle of superposition.

.....

.....

..... [2]

(b) Coherent light is incident normally on two identical slits X and Y. The diffracted light emerging from the slits superposes to produce an interference pattern on a screen positioned at a distance of 1.9 m from the slits.

Fig. 4.1 shows the arrangement and the central part of the interference pattern of bright and dark fringes formed on the screen.

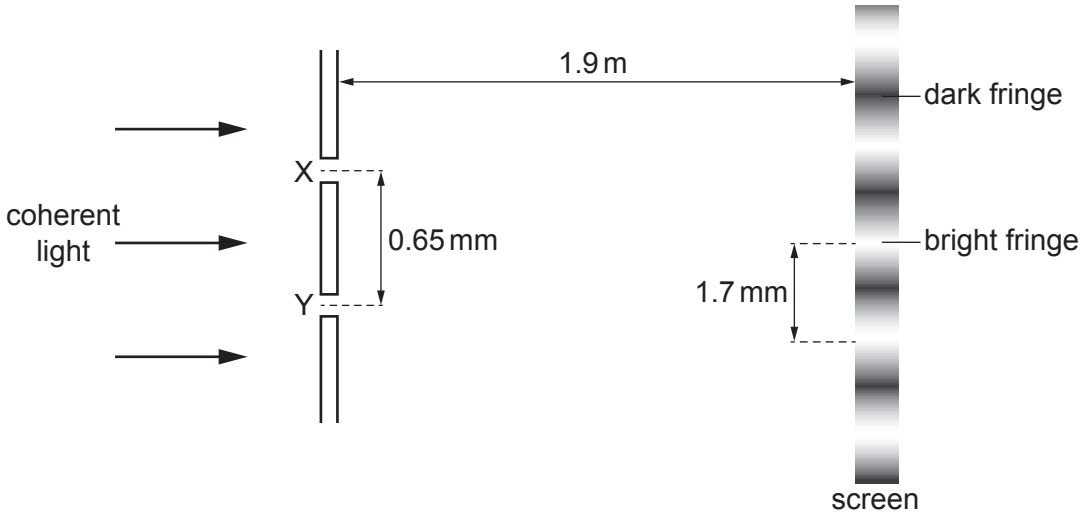

Fig. 4.1 (not to scale)

The separation of the slits is 0.65 mm. The distance between the centres of adjacent bright fringes is 1.7 mm.

Calculate the wavelength λ of the light.

λ = ... m [3]

(c) Light waves from slits X and Y in **(b)** arrive at a point between adjacent bright fringes on the screen. Fig. 4.2 shows the variation of displacement with time for the waves arriving at the point where they meet.

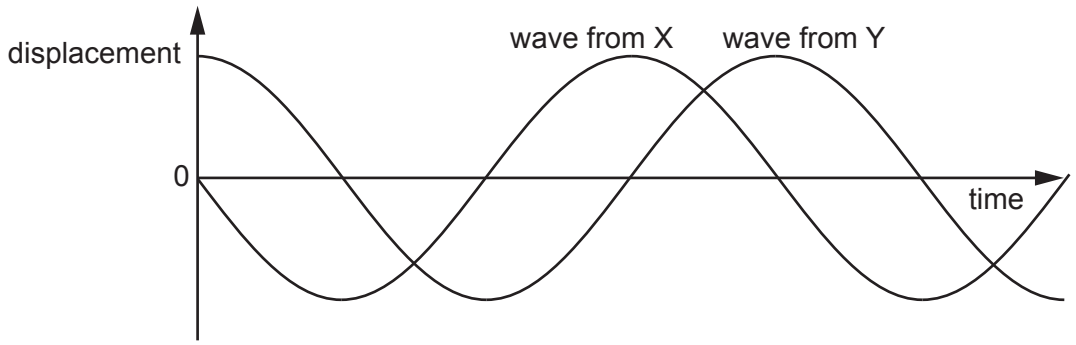

Fig. 4.2

A student makes two statements about the waves at this point:

Statement 1: 'The phase difference between the waves is 90°.'

Statement 2: 'The amplitude of the resultant wave is zero.'

(i) Explain how statement 1 is correct.

.....

.....

..... [1]

(ii) State and explain whether statement 2 is correct.

.....

.....

..... [1]

(d) The width of each slit in **(b)** is decreased by the same amount. There is no change to the separation of the slits.

Describe and explain the effect, if any, of this change on the appearance of the interference pattern.

.....

.....

..... [2]

[Total: 9]

BLANK PAGE

5 A train travels at a constant high speed along a straight horizontal track towards an observer standing adjacent to the track, as shown in Fig. 5.1.

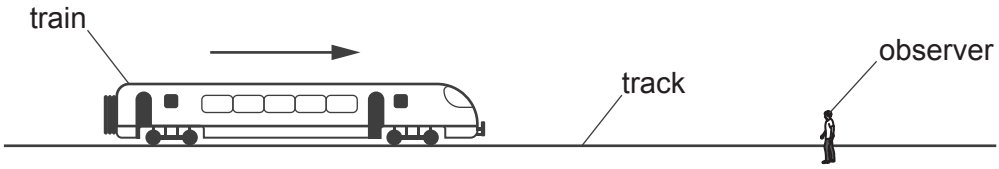

Fig. 5.1

The train sounds its horn continuously as it approaches the observer, from time $t = 0$ until it is well past the observer at time $t = t_2$. The train passes the observer at time $t = t_1$.
The horn emits a sound wave of constant frequency f_S.

(a) On Fig. 5.2, sketch the variation of the frequency of sound heard by the observer with time t, from time $t = 0$ to $t = t_2$.

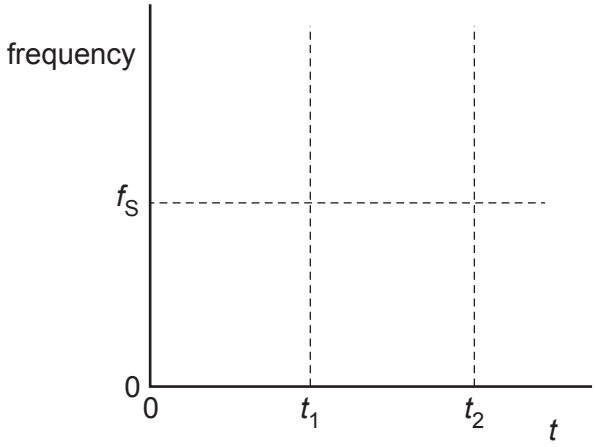

Fig. 5.2

[1]

(b) At a particular time, the sound waves at the observer have an intensity of $4.7 \times 10^{-3}\,\text{W m}^{-2}$. The waves at the observer are incident at right angles on a circular detector of radius 2.8 cm.

Calculate the power P of the waves incident on the detector.

$P =$ ..... W [3]

[Total: 4]

6 A battery is connected in a circuit with a light-dependent resistor (LDR), two fixed resistors and a voltmeter, as shown in Fig. 6.1.

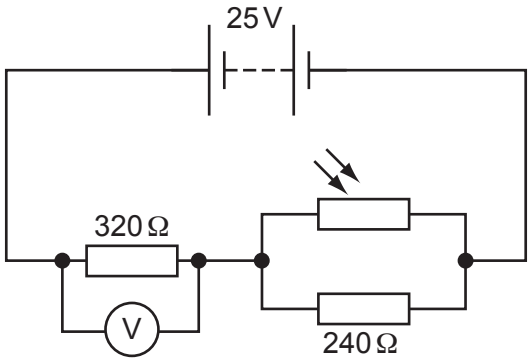

Fig. 6.1

The battery has an electromotive force (e.m.f.) of 25 V and negligible internal resistance.
The resistors have resistances of 320 Ω and 240 Ω.

(a) The voltmeter displays a reading of 16 V.

(i) Show that the current in the battery is 0.050 A.

[1]

(ii) Calculate the resistance of the LDR.

resistance = ... Ω [3]

© UCLES 2023

(iii) Determine the ratio

$$\frac{\text{power dissipated in the LDR}}{\text{power dissipated in the } 240\,\Omega \text{ resistor}}.$$

ratio = ... [2]

(b) The intensity of the light incident on the LDR increases.

State and explain what happens to the voltmeter reading.

.....

.....

.....

..... [3]

[Total: 9]

7 **(a)** The results of the α-particle scattering experiment led to the development of the nuclear model for the atom.

State the results that suggested that most of the mass of the atom is concentrated in a very small region and most of the atom is empty space.

.....

.....

.....

..... [2]

(b) State the composition of γ-radiation.

..... [1]

(c) Table 7.1 lists the names of three particles and possible classifications for them.

Table 7.1

particle name	classification		
	baryon	hadron	lepton
neutrino			
neutron			
positron			

Complete Table 7.1 by placing ticks (✓) in the boxes to indicate the classifications that apply to each particle. [2]

© UCLES 2023

(d) The discovery of a particle with an unusual charge was an important step in the development of the theory of quarks. The particle is a hadron with a mass of 2.19×10^{-27} kg and a charge of +2*e*, where *e* is the elementary charge.

(i) Calculate the mass, in u, of the particle. Give your answer to three significant figures.

mass = ... u [1]

(ii) Determine a possible quark composition of a hadron with a charge of +2*e*.
Explain your reasoning.

[2]

[Total: 8]

BLANK PAGE

Permission to reproduce items where third-party owned material protected by copyright is included has been sought and cleared where possible. Every reasonable effort has been made by the publisher (UCLES) to trace copyright holders, but if any items requiring clearance have unwittingly been included, the publisher will be pleased to make amends at the earliest possible opportunity.

To avoid the issue of disclosure of answer-related information to candidates, all copyright acknowledgements are reproduced online in the Cambridge Assessment International Education Copyright Acknowledgements Booklet. This is produced for each series of examinations and is freely available to download at www.cambridgeinternational.org after the live examination series.

Cambridge Assessment International Education is part of Cambridge Assessment. Cambridge Assessment is the brand name of the University of Cambridge Local Examinations Syndicate (UCLES), which is a department of the University of Cambridge.

© UCLES 2023